ADVANCE COOL TECHNOLOGY CO.,LTD.

Central Air Conditioner



Water-cooled package air conditioner

THE CHILLER EXPERT



www.advance-cool.com

We are specialized in Manufacturing Water Chiller Unit and Package Chiller range from Small Chiller to Large Chiller Plant using both Scroll compressor & Screw compressor as well as install Complete Cooling System including Machine Cooling System, Large Air Conditioning System

Our Air Cooled Chiller and Water Cooled Chiller are equiped with all high quality and well known components such as Copeland Compressor. With our experiences of more than 30 years we are capable of serving our customers' needs by providing High Quality Chillers as well as Outstanding Services.

Our service teams are highly experienced and well trained, we can ensure quality and fast service within 24hours. We do accept custom made chillers according to customer specific requirement.

Office

300/3 Soi Ladprao 107 Klongchan Bangkapi, 10240 Bangkok Thailand Website:www.advance-cool.com

Tel : 02-187-0660,02-187-0661,02-187-0663 Fax : 02-187-0662 Email : inquiry@advance-cool.com

Factory

155 Moo 4, Suwan Sot Road, Wang Krachan, Muang Nakhon Nayok, Nakhon Nayok 26000

Directory

Product Overview	2
Nomenclature	2
Performance Features	3
Specifications	6
Cooling Capacity	7
Dimensions	8
Installation Requirements	11
System Connection Diagram	11
Pipe Connection	12
Electrical Wiring Drawing	12
Electrical Parameters	13
Operating Range	13
Maintenance	14

Product Overview

Overview

ACT TPW series water-cooled package unit (floor-standing type) is a new generation user-friendly unitary air conditioning unit launched by absorbing the latest designs at home and abroad and in combination with the actual usage. The product features mature technology, compact structure, simple installation, stable and reliable performance and high EER. It can be widely used in new or reconstructed industrial and commercial sites such as factory buildings, hospitals, schools, shopping malls, and banks.

The TPW series water-cooled package unit (floor-standing type) is classified into six models. Of which, TPW030 also supports direct discharge for scenarios where air supply pipe is not required, except for the standard air duct connection. The other models are standard duct type units.

Nomenclature

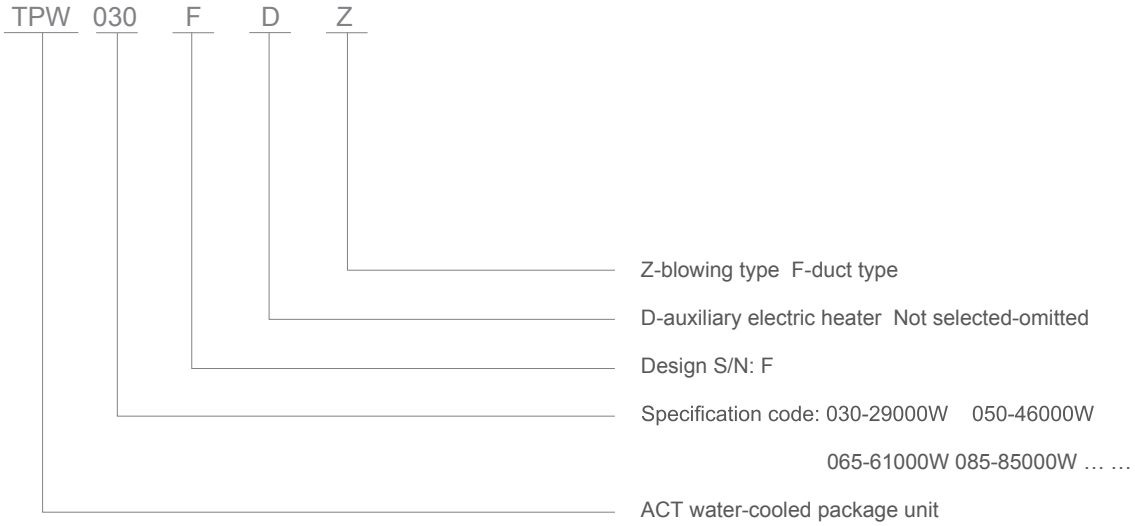

Features

1. Environmental-friendly

The units use eco-friendly refrigerant R410A. The chlorine-free refrigerant does not harm the ozone layer (zero-ODP), and is stable and non-toxic. It is green and unlikely to be replaced. Thanks to the high heat exchange coefficient, it can lower the power consumption.



2. Cutting-edge components

High-efficiency scroll compressor

The units adopt the high-efficiency scroll compressors from a world-famous manufacturer. The compressor is featured by a small clearance capacity and small friction loss. Compared with the traditional semi-hermetic and full-hermetic piston compressors, it provides high reliability, high EER, and smooth and quiet operation.

All but TPW050FF that adopts one compressor in the series come with multiple compressors. In this way, multi-level energy regulation is attainable, partial load efficiency gets a boost, and operation is more energy-saving. Besides, the more balanced running time of compressors prolongs the service life of the unit.



High-efficiency heat exchanger

The unit adopts a high-efficiency tube condenser, which lowers the requirement on the water quality, prevents scaling, and features excellent condensing and heat transmission performance. The heat exchanger is composed of the flat window hydrophilic aluminum foil and inner-threaded tubes. The large heat exchange area effectively improves the unit COP.



High-performance fans

The fan motor is at least IP55 rated. It can withstand hostile weather conditions such as gale and heavy rain, and ensure that the unit can operate safely and reliably in extreme weather conditions.

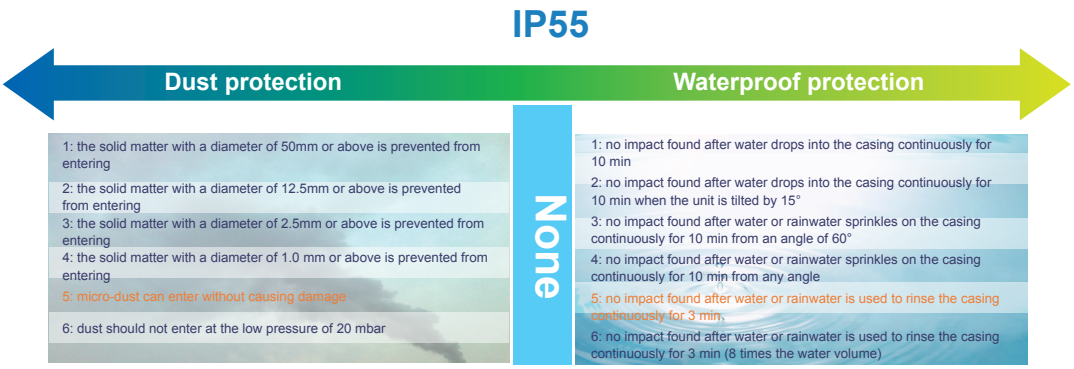

3. Reliability

The quality system is ISO 9001 certified, and a unique automatic detection technology is adopted in the production process to ensure air tightness of the system. The unit has been tested online by the performance testing lab to ensure that the unit performance meets the requirements.

The unit is equipped with multiple protection functions to ensure the operating stability and reliability.

- Communication fault protection
- High discharge temperature protection
- Large compressor current protection
- Small compressor current protection
- Low outlet water temperature protection
- High outlet water temperature protection
- Phase sequence protection
- Sensor failure protection
- Frequent startup protection
- Balanced wear
- High pressure protection
- Low pressure protection
- Fan overload protection
- Small water flow protection



4. Intelligent control

Microcomputer control system

The latest water-cooled package unit adopts the upgraded third-generation microcomputer controller and wired controller. The third-generation microcomputer controller integrates phase sequence detection and current detection, and provides a USB interface to facilitate maintenance of the unit, and update and upgrade of the control program developed by ACT. The controller automatically adjusts the operating status of the equipment according to the temperature and other related parameters to meet the requirements of indoor operating conditions, thus achieving the best effect.

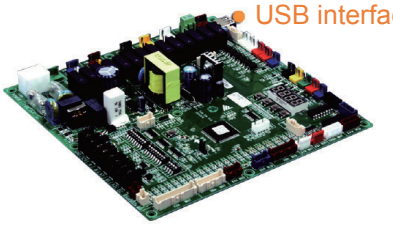

Remote power-on/off + centralized remote control + building automation

The unit's control board provides interfaces for the remote wired control switch/mode switching interlock. By using the DIP switches, users can switch on and off the unit/switch between modes remotely. The reserved remote communication interfaces can realize remote monitoring and switch control of the unit. All the units of the series are equipped with an RS485 communication interface, support Modbus and Building Automation System (BAS), to easily implement centralized control and intelligent management of multiple modules.

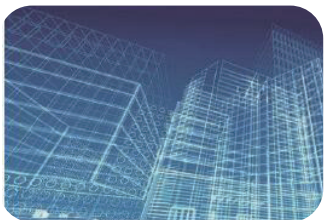

User-friendly UI

The series is equipped with optimized control programs, including one-tap start-up, compressor balancing, time setup, status display, fault bypass, automatic fault judgment, automatic fault processing, and automatic fault alarm display. In addition, multiple functions can be configured as required, such as timed on/off, weekend/holiday running, power-off memory, and multi-password protection.



Unit Selection Parameters

Specifications

Model		TPW	TPW030FF(Z)	TPW050FF	TPW065FF	TPW085FF	TPW130FF	TPW165FF
Rated cooling capacity		W	29000	46000	61000	85000	127000	165000
Cooling capacity range		%	0,50,100	0,100	0,30,70,100	0,50,100	0,33,66,100	0,25,50,75,100
Air flow		m^3/h	5300	8000	11000	17000	22000	28800
ESP		Pa	100(0)	150	150	200	300	350
Power supply		-	380V 3N~ 50Hz					
Power input		W	8300	13800	17500	23700	37200	45900
Maximum power input		W	10600	17400	20300	28000	43900	54500
Maximum operating current		A	20.07	32.95	40.42	53.03	83.14	103.22
Charge amount	R410A	kg	1.5*2	3.5	3.0+1.3	3.1*2	3.1+3.4*2	3.4*4
Compressor type		-	Scroll compressor					
Evaporator type		-	Finned copper tube type					
Condenser	Type	-	Efficient tube					
	Water flow	m^3/h	6.24	9.89	13.12	18.28	27.31	35.48
	Water pressure drop	mH_2O	3.8	8.5	7.4	9.5	10.5	11.5
Fan	Type	-	Centrifugal fan					
	Drive mode	-	Belt drive					
Air filter	Qty	Pcs	2	2	2	6	6	6
	Dimensions	mm	665*595	720*648	825*720	514*650	675*644	690*815
Condensing water drainage pipe	Diameter of intermediate drainage pipe	DN	DN25(R1)					
	Diameter of bottom drainage pipe	DN	DN25(R1)					
Size of cooling water connecting pipe (Inner-threaded tube)			Rc1-1/4	Rc1-1/2	Rc2	Rc2-1/2	Rc2-1/2	Rc2-1/2
Dimensions	Length	mm	1470	1470	1810	2028	2420	2560
	Width	mm	500	700	700	1100	1263	1263
	Height	mm	1700	2000	2000	2030	2080	2360
Weight	Cooling-only	kg	280	350	440	900	1060	1280
Energy efficiency grade		-	1	1	1	1	1	1

★ Remarks

1. The cooling capacity test is based on the following conditions: indoor dry bulb temperature 27°C, wet bulb temperature 19°C; inlet water temperature 30°C, Water flow = Nominal cooling capacity * 0.215 ($m^3/(h \cdot kW)$).
2. The cooling capacity does not take into account the heating loss of fan motor.
3. The external static pressure refers to the static pressure measured under normal air flow condition of standard configuration.
4. The numbers in brackets are applicable to the direct-blow fan type.
5. Specifications may be changed due to product improvement. Please refer to the nameplate label on the unit.
6. For the unit energy efficiency grade, refer to GB19576 The Minimum Allowable Values of the Energy Efficiency and Energy Efficiency Grades for Unitary Air Conditioners.

Cooling Capacity

Model	Air flow (m^3/h)	Air return temperature of evaporator (°C)		Water inlet temperature of condenser (°C)					
		Dry bulb temperature (°C)	Wet bulb temperature (°C)	18		30		34	
				Total cooling capacity	Sensible cooling capacity	Total cooling capacity	Sensible cooling capacity	Total cooling capacity	Sensible cooling capacity
TPW030FF	5300	32	23	114%	118%	108%	104%	106%	99%
		27	19	105%	105%	100%	100%	98%	98%
		21	15	95%	90%	90%	96%	89%	98%
TPW050FF	8000	32	23	123%	116%	105%	104%	99%	100%
		27	19	112%	105%	100%	100%	96%	98%
		21	15	98%	92%	94%	95%	92%	97%
TPW065FF	11000	32	23	115%	128%	109%	121%	107%	119%
		27	19	107%	119%	100%	100%	98%	94%
		21	15	96%	108%	89%	75%	87%	64%
TPW0850FF	17000	32	23	116%	147%	109%	136%	107%	132%
		27	19	107%	133%	100%	100%	98%	89%
		21	15	95%	116%	89%	57%	87%	38%
TPW130FF	22000	32	23	120%	115%	113%	105%	110%	101%
		27	19	110%	107%	100%	100%	97%	98%
		21	15	99%	97%	85%	94%	80%	93%
TPW165FF	28800	32	23	110%	110%	109%	102%	109%	100%
		27	19	107%	103%	100%	100%	98%	99%
		21	15	104%	96%	89%	97%	84%	97%

Dimensions

TPW030FF

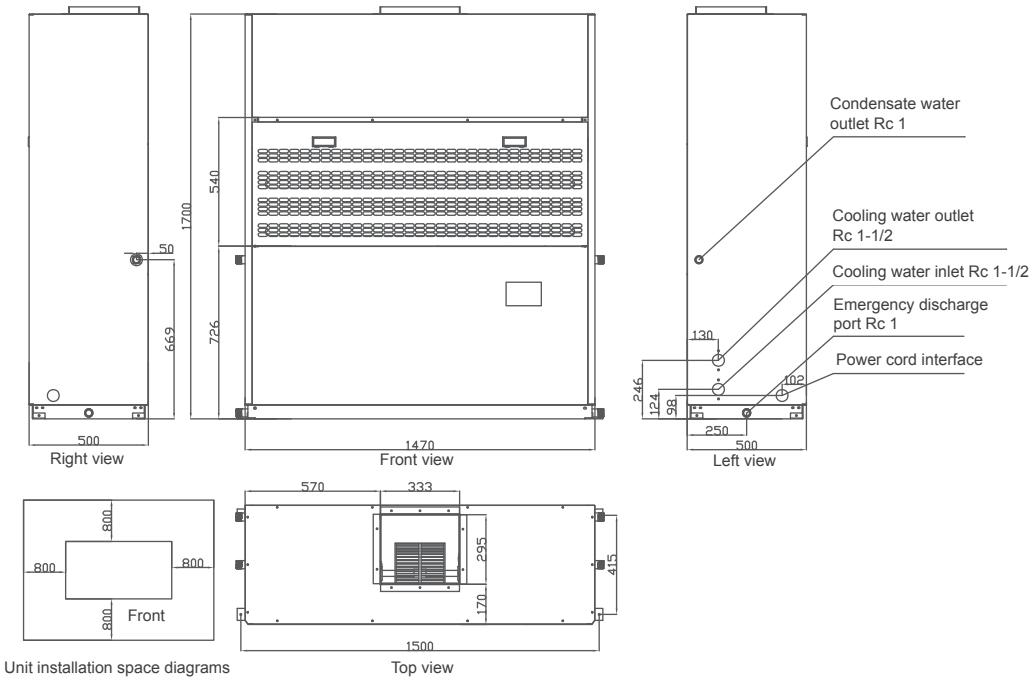

TPW050FF

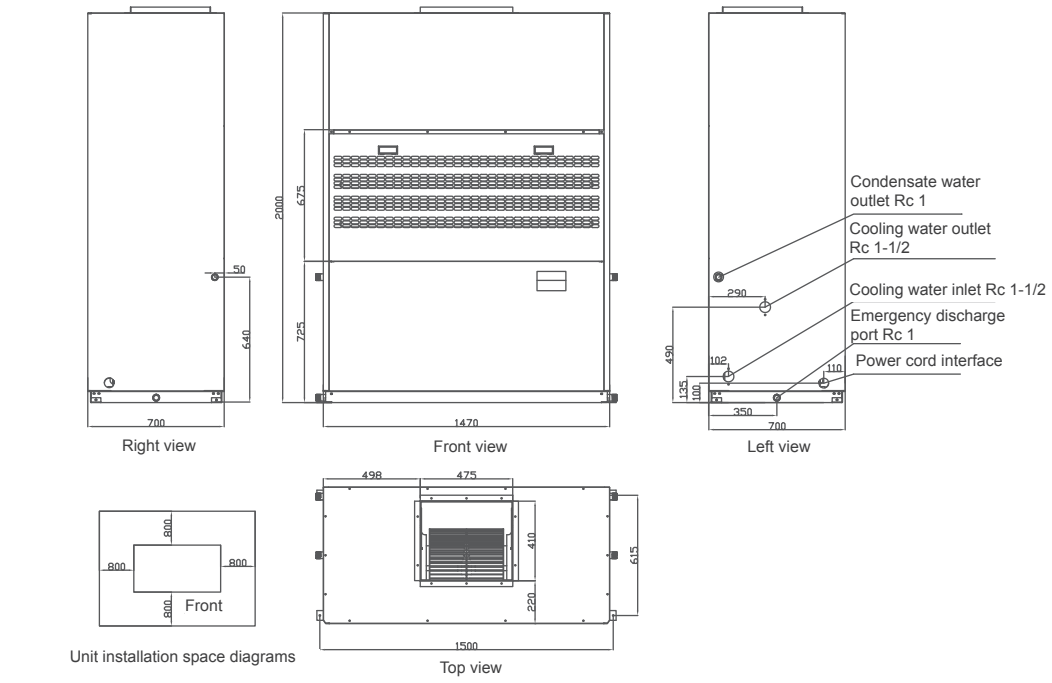

TPW065FF

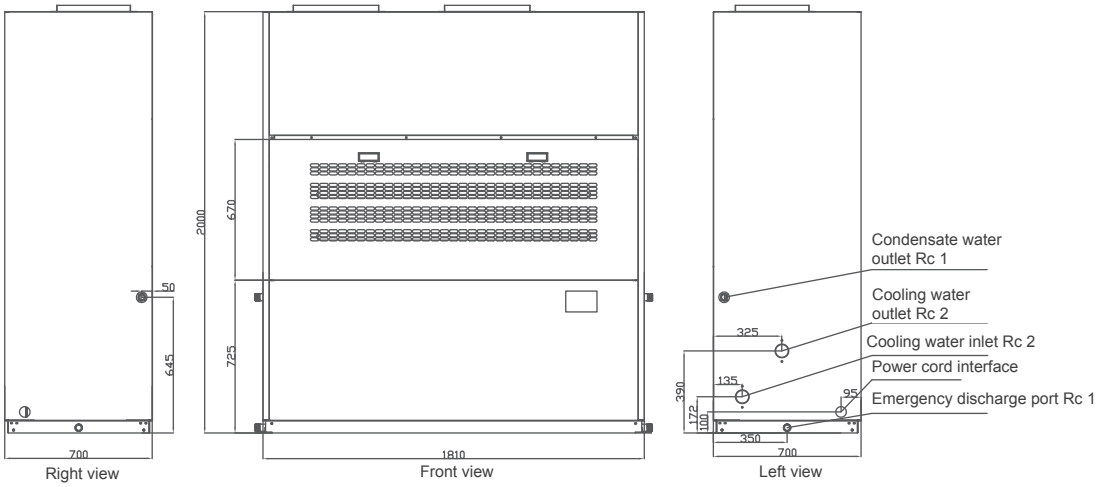

TPW085FF

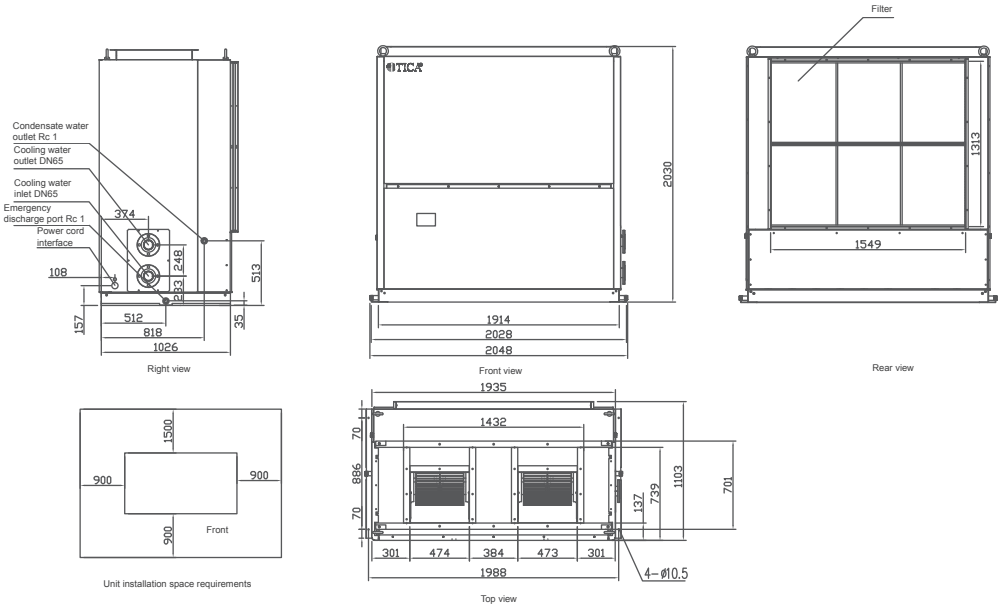

TPW130FF

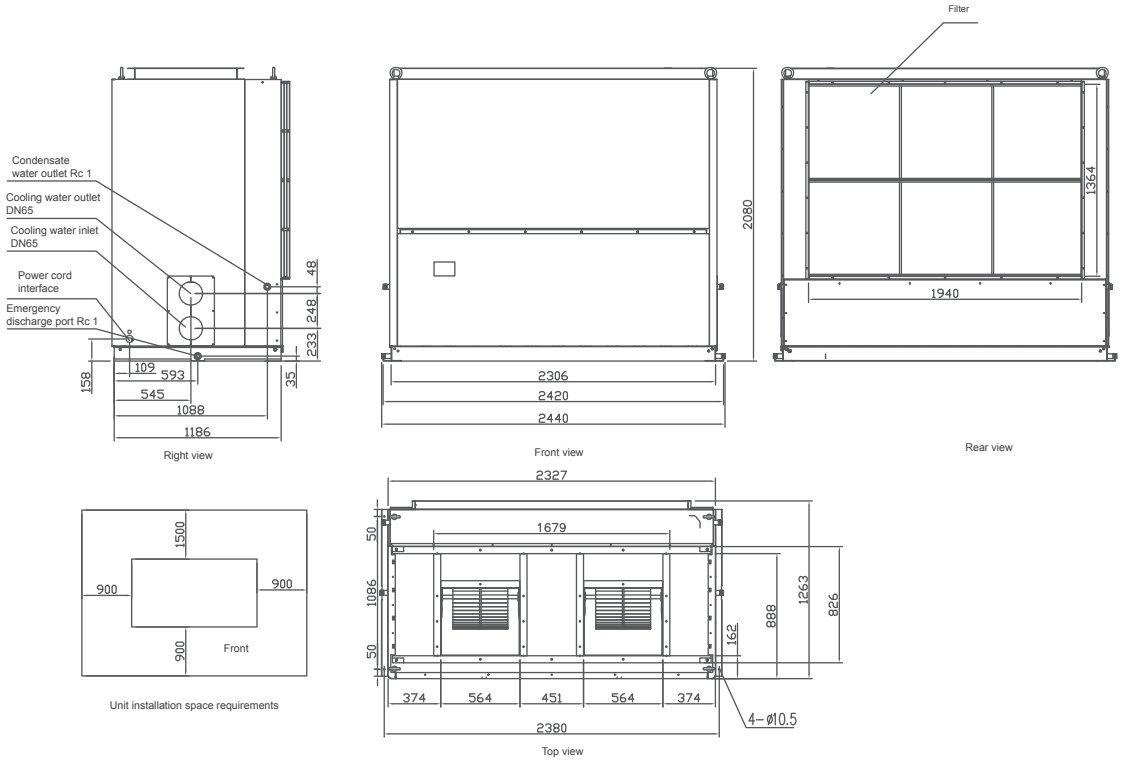

TPW165FF

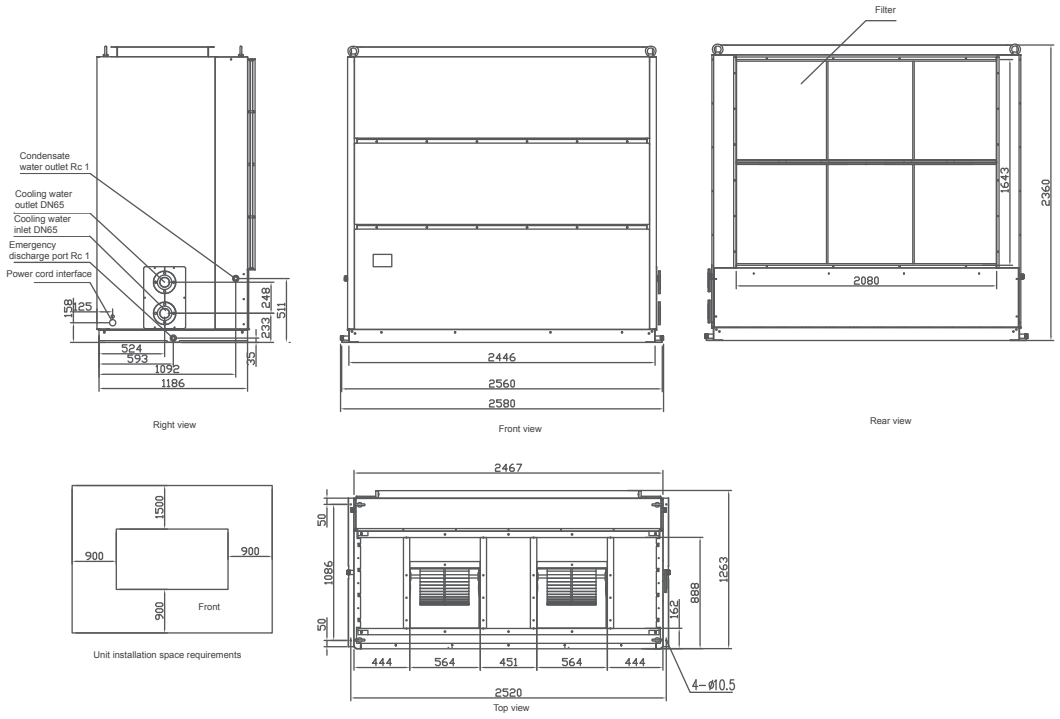

Installation Instructions

Installation Requirements

- Do not install the unit in an open outdoor environment.
- Do not install the unit in an environment that is humid, corrosive or exposed to explosive gases.
- The unit adopts the "free return air" design. The equipment room serves as the return air room. If the return air goes from the duct into the unit, the air return flange must be changed and a winding connection pipe must be installed.
- The unit must be installed on the flat floor or a concrete base, which must be solid enough to withstand the weight of the unit during its operation.
- Install rubber or spring cushions at the fixing feet to avoid vibration and noise.
- During installation, the clearance for drainage, ventilation and maintenance must be reserved. Refer to the external dimension drawings of the unit for the minimum installation clearance.
- The unit and connecting pipes should be separated from the wall and ceiling during installation.
- Install the unit in a place least sensitive to sound, e.g., near a stairwell, elevator room or toilet. A better way of sound insulation is to use partitions between the unit and the air conditioning room, and seal the doors and windows. Silencers or sound absorbing cotton can also be used in the air duct if necessary.

System Connection Diagram

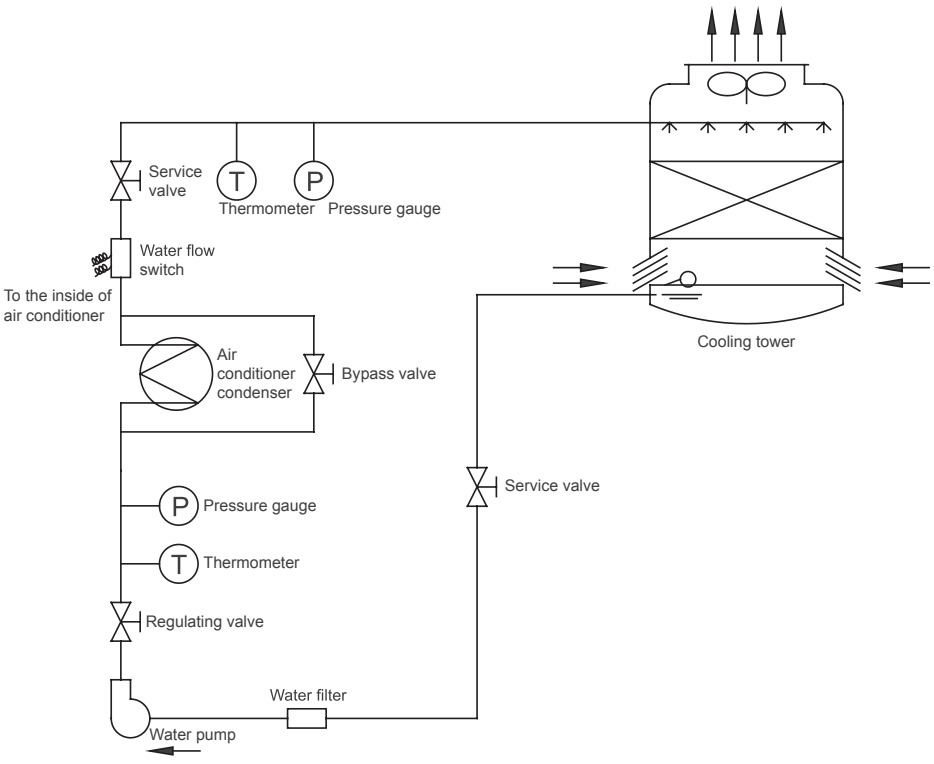

Pipe Connection

- All piping systems should be installed in compliance with local regulations. Do not bend or move pipes up or down unless you must.
- To reduce the vibration and noise transmission of the pump, a flexible connecting pipe can be installed on the suction and discharge pipes of the pump.
- To ensure constant condensation pressure and temperature, a three-way water flow regulating valve can be used to adjust the water flow into the condenser. The valve must be set to maintain the minimum inlet water temperature at 18°C.
- To prevent the water temperature from being too low, a temperature switch can be installed (the recommended water temperature is 27°C) to control the cooling tower fan, thus maintaining the water temperature in the normal range.
- The condensate water drain pipe is connected from the evaporator drain pan (the unit chassis is equipped with a drain pan for emergency drainage only).
- In order to prevent external air from entering the evaporator and facilitate the drainage of condensate water, a small offset bend (water lock) can be installed 51 mm below the drain pipe.
- The drain pipe should stretch outside the wall of the building to prevent the drained water from flowing onto the wall.
- The water pipes should be insulated to prevent dripping of the condensed water.
- The pump suction pipe segment and the condenser outlet of air conditioner must be equipped with service valves, and the pump outlet must be equipped with a water flow regulating valve. Do not use the pump outlet valve to adjust water pipes.

Electrical wiring diagram (with cooling requirement in winter)

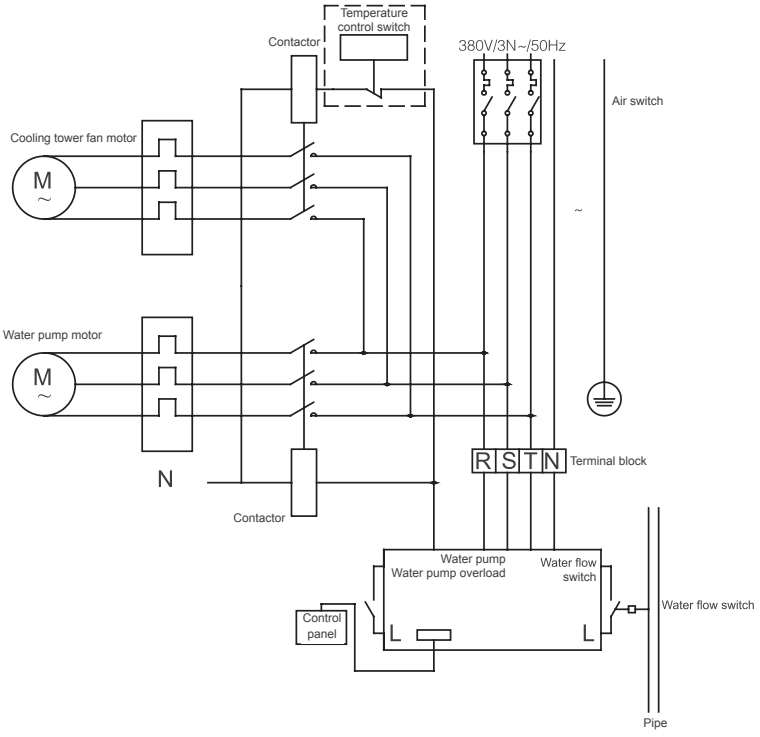

Note: If there is any requirement for refrigeration in winter, it is recommended to follow the wiring diagram.
Add a temperature control switch (marked by the dotted line in the figure) that detects the cooling water to control the operation of the cooling tower fan motor

Electrical Parameters

Model			TPW030FF(Z)	TPW050FF	TPW065FF	TPW085FF	TPW130FF	TPW165FF
Power supply			380 3N~50Hz					
Power cord	Main line (R/S/T)	Sectional area (mm^2)	4	10	16	25	35	70
		Pieces	3					
	Neutral line	Sectional area (mm^2)	4	10	10	16	25	35
		Pieces	1					
	GND	Sectional area (mm^2)	4	10	16	16	16	35
		Pieces	1					

★ Notes

The power cord specifications of this table are based on the maximum power (maximum current) of the unit for the PVC insulated copper core cable laid in the air under the ambient temperature of 40°C. Please refer to the electrician manual and the power cord specifications of the wire and cable manufacturer if your installation conditions are different or de-rate the unit if it is necessary.

Operating Range

The TPW unit is connected to a single power supply without any additional control power. The power supply of the unit is 380V/3N~/50Hz, and the control power supply is 220V~/50Hz. Protection measures include compressor overload protection, motor winding protection, high and low system pressure protection and etc.

Power supply		Voltage range (V)	Water inlet temperature of the condenser (°C)	Evaporator air inlet	
Compressor	Fan	342~420	16~40	Wet bulb temperature (°C)	Dry bulb temperature (°C)
380 3N~50Hz	380 3N~50Hz			13~24	20~32

Maintenance

The TPW units are highly automated devices. Therefore, check the operation status periodically. Long-term and effective maintenance can greatly enhance the operation reliability of the unit and prolong the unit's service life.

- Clean the water filter installed outside the unit periodically to ensure the cleanliness of water in the system and prevent unit damage caused by clogging of the filter. While using and maintaining the unit, do not adjust any of the safety devices, which have been set properly before shipping. ACT is not liable for any damage of the unit caused by unauthorized adjustment.
- Do not pile up any debris around the unit, which may block the air inlet and outlet of the unit. Keep the unit clean, dry and well ventilated. Clean the air-side heat exchanger periodically (once 1-2 months) to maintain excellent heat transfer effect and save energy.
- Regularly check whether the water refill and air discharge devices of the water system work properly. Air may enter the system and cause low water circulation or water circulation difficulties, affecting the cooling effect of the unit as well as the reliability of the unit.
- Check whether wiring of the unit power supply and electrical system is secure, and whether electrical components work abnormally. If an exception occurs, repair or replace electrical components. Check whether the unit is grounded reliably.
- Check the working conditions of each component of the unit regularly and check whether the work pressure of the cooling system of the unit is within the normal range. Check whether there are oil dirt on the pipeline connectors and inflation valves of the unit to ensure that the cooling system does not leak.
- If the unit is not used for long after one running period ends, drain water out of the unit pipeline, cut off power and install the protection sleeve (not installed on the unit at factory). Fill water into the system and conduct an overall check on the unit before starting the unit again. Then, electrify the unit to preheat it for more than 6 hours, and then start the unit and put it into normal operation after confirming that everything is OK.

DATE	NOTE

ACT

THE CHILLER EXPERT

Office

300/3 Soi Ladprao 107 Klongchan Bangkapi, 10240 Bangkok Thailand Website:www.advance-cool.com

Tel : 02-187-0660,02-187-0661,02-187-0663 Fax : 02-187-0662 Email : inquiry@advance-cool.com

Factory

155 Moo 4, Suwan Sot Road, Wang Krachan, Muang Nakhon Nayok, Nakhon Nayok 26000